★

الامتحان الوطني الموحد للبكالوريا
المسالك الدولية- خيار أنجليزية
الدورة الاستدراكية 2017
- الموضوع -

RS 30E

المملكة المغربية
وزارة التربية الوطنية والتكوين المهني والتعليم العالي والبحث العلمي
المركز الوطني للتقويم والامتحانات والتوجيه

4	مدة الإنجاز	الفيزياء والكيمياء	المادة
7	المعامل	شعبة العلوم الرياضية (أ) و (ب) – خيار أنجليزية	الشعبة أو المسلك

The use of the non-programmable scientific calculator is allowed

This exam paper consists of four exercises; one in Chemistry and three in Physics

Chemistry (7 points)

- Study of h**ydrolysis of an ester and study of an aqueous solution of the propanoic acid.**

- Study of the electrochemical cell: Cadmium – Silver.

Physics (13 points)

✓ **Nuclear Transformations (2,25 points) :**

- Study of the activity of a radioactive sample.

✓ **Electricity (5,25 points):**

-Charging and discharging of a capacitor.

-Forced oscillations in the circuit (RLC) **.**

✓ **Mechanics (5,5 points):**

- Study of the motion of an oscillating system (solid – spring).

- Determination of the radius of the moon trajectory around the Earth.

Marking scale

Chemistry (7 points): **Part I and part II are independent**

Part I: Study of hydrolysis of an ester and study of an aqueous solution of the propanoic acid

Carboxylic acids are chemical substances existing in natural organic compounds or synthetics. These acids are used in the production of many substances such as esters, which have a special flavour and can be used in medicinal and food industry…

In this part, we are interested in studying the hydrolysis of an ester E and studying an aqueous solution of the propanoic acid (C_2H_5COOH).

Given:

- Molar molecular masses: $M(C_2H_5COOH)=74\,g.mol^{-1}$, $M(C_2H_5OH)=46\,g.mol^{-1}$, $M(E)=102\,g.mol^{-1}$.
- $pK_A(C_2H_5COOH_{(aq)}/C_2H_5COO^-_{(aq)})=4,9$.

1-Study of hydrolysis of an ester:

1-1-Under certain experimental conditions, $n_1=0,1mol$ of an ester react with $n_2=0,1mol$ of water to produce propanoic acid and ethanol (C_2H_5OH).

0,5 **1-1-1-**Write the structural formula of the ester E and give its name.

0,75 **1-1-2-**Determine the mass of the carboxylic acid formed at equilibrium, knowing that the equilibrium constant of this transformation is $K=0,25$.

1-2- We perform the basic hydrolysis of a mass $m_0=10,2\,g$ of the ester E, using in excess an aqueous solution of the sodium hydroxide $Na^+_{(aq)}+HO^-_{(aq)}$. We obtain a mass $m_{exp}=4,2\,g$ of the alcohol.

0,25 **1-2-1-** Write the equation of the occurring reaction.

0,5 **1-2-2-** Determine the yield r of this reaction.

2- Study of an aqueous solution of the propanoic acid

2-1-We have an aqueous solution of the propanoic acid of molar concentration C and of volume V. The measurement of the pH of this solution gives the value $pH=2,9$.

0,25 **2-1-1-** Write the equation of the propanoic acid with water.

0,25 **2-1-2-** Write an expression of pH of the solution in terms of pK_A of the pair $C_2H_5COOH_{(aq)}/C_2H_5COO^-_{(aq)}$ and the molar effective concentration of both chemical species C_2H_5COOH and $C_2H_5COO^-$ in the solution.

1 **2-1-3-** Show that the final progress rate of the reaction is written as: $\tau=\dfrac{1}{1+10^{pK_A-pH}}$. Calculate its value.

2-2- We take a volume V_A of an aqueous solution of the propanoic acid of molar concentration C_A, then we add progressively an aqueous solution (S_B) of the sodium hydroxide $Na^+_{aq}+HO^-_{aq}$ of molar concentration C_B. We monitor the variation of the pH of the reaction mixture with the volume V_B of the solution (S_B) added.

From the preceding measurements, we draw the curve on the right which represents the variation of the pH of

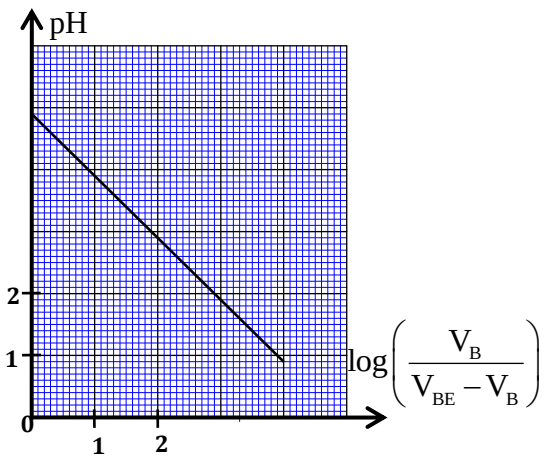

the reaction mixture with $\log\left(\frac{V_B}{V_{BE}-V_B}\right)$ so that $V_B < V_{BE}$ where V_{BE} is the volume of the sodium hydroxide added at the equivalence point.

0,25 **2-2-1-** Write the equation of the titration.

0,5 **2-2-2-** Find out, for a volume V_B of the solution (S_B) added, the expression of the ratio $\frac{[C_2H_5COO^-_{(aq)}]}{[C_2H_5COOH_{(aq)}]}$ in terms of V_B and V_{BE}.

0,5 **2-2-3-** Verify the value of the $pK_A(C_2H_5COOH_{(aq)} / C_2H_5COO^-_{(aq)})$.

Part II : Study of the electrochemical cell: Cadmium – Silver

We study the electrochemical cell Cadmium – Silver which involves the two redox pairs $Ag^+_{(aq)} / Ag_{(s)}$ and $Cd^{2+}_{(aq)} / Cd_{(s)}$.

Given :

- Faraday : $1F = 9,65.10^4\ C.mol^{-1}$,
- The equilibrium constant associated to this equation: $2Ag^+_{(aq)} + Cd_{(s)} \underset{(2)}{\overset{(1)}{\rightleftarrows}} 2Ag_{(s)} + Cd^{2+}_{(aq)}$ is $K \simeq 5.10^{40}$ à $25^\circ C$,
- Molar mass of Cadmium : $M(Cd) = 112,4\,g.mol^{-1}$,
- The immersed consumable part of the electrode is in excess.

We perform this electrochemical cell by immersing:

- A silver plate in a beaker which contains an aqueous solution of the silver nitrate $Ag^+_{(aq)} + NO^-_{3(aq)}$ of volume $V = 250\,mL$ of initial molar concentration $C_1 = [Ag^+_{(aq)}]_i = 0,400\,mol.L^{-1}$.
- A cadmium plate in another beaker which contains an aqueous solution of the cadmium nitrate $Cd^{2+}_{(aq)} + 2NO^-_{3(aq)}$ of volume $V = 250\,mL$ of initial molar concentration $C_2 = [Cd^{2+}_{(aq)}]_i = 0,200\,mol.L^{-1}$.

A salt bridge connects the two solutions.
In series, between electrodes of the cell, we set up a resistor, an ammeter and a switch.

0,5 **1-**Choose which one of the following statements is true:

a- The transformations occurring in the electrochemical cells are forced.
b- The positive pole of the electrochemical cell is the electrode of silver.
c- The spontaneous direction of the chemical system of the electrochemical cell is the direction (2) of the equation.
d- The oxidation occurs at the cathode.

2- We switch on the circuit at an instant $(t = 0)$ taken as an origin of time. A steady electric current of intensity $I = 215\,mA$ flows through the circuit.

0,5 **2-1-** Write the expression, at one instant t of time, of the reaction quotient Q_r in terms of the progress x of the reaction.

0,75 **2-2-** Calculate Q_r at the instant $t = 10\,h$.

0,5 **2-3-** Calculate the change of the mass $|\Delta m|$ of the cadmium between $t = 0$ and the instant at which the electrochemical cell is consumed.

Physics (13 points) :

Nuclear Transformations (2,25 points) :

Study of the activity of a radioactive sample

In this exercise, we study the disintegration of a radioactive sample of cobalt containing the following indications:

- Cobalt 60 : $^{60}_{27}Co$.
- Molar atomic mass : $M = 60\,g.mol^{-1}$.
- Radioactivité : β^- .
- Time constant : $\tau = 2,8.10^3$ days .

Given :

- Avogadro constant $N_A = 6,02.10^{23}\,mol^{-1}$,
- Solar year : one year $= 365,25$ days ,
- Binding energy of a nuclide $^A_Z X$: $E_\ell = 588,387\,MeV$,
- $m(^{60}Co) = 59,8523\,u$,
- $m(^1_0n) = 1,00866\,u$, $m(^1_1p) = 1,00728\,u$, $m(^0_{-1}e) = 5,486.10^{-4}\,u$,
- $1u = 931,494\,MeV.c^{-2}$.

0,5 **1-** Choose which one of the following statements is true:

a- The decay constant has a dimension of time .

b- The activity of a sample is expressed in s .

c- According to the curve of the binding energy per nucleon (Aston curve), for heavy nuclei; the stability decreases with the increase in the mass of the nucleus.

d-The mass defect is expressed in MeV .

0,25 **2-**Define the disintegration β^- **.**

0,75 **3-**The disintegration of $^{60}_{27}Co$ produces the nucleus $^A_Z X$. Based on the mass energies, calculate in MeV, the energy released $|\Delta E|$ by disintegration of $^{60}_{27}Co$.

0,75 **4-**At an instant $(t = 0)$ assumed origin of time, a laboratory receives a radioactive sample of initial mass $m_0 = 50\,mg$. At an instant t_1 of time, the measurement of the activity of this sample gives the value $a_1 = 5,18.10^{11}\,Bq$.

Show that $t_1 = \tau \ln\left(\frac{N_A.m_0}{\tau.M.a_1}\right)$ and calculate its value, in the unit « year ».

Electricity (5,25 points)

The aim of this exercise is the study of :
-Charging a capacitor that has an initial charge,
-Free oscillations in (RLC) series circuit,
-Forced oscillations in (RLC) series circuit.

I-Charging and discharging of a capacitor

We set up the mounting shown in figure 1. It consists of:
- A power supply G of voltage. Its electromotive force is $E=8V$,
-Two resistors of resistances R and $R_0=30\Omega$,
-A capacitor of capacitance $C=2,5\mu F$.
The voltage between its terminals is $u_c=U_0$ with $0<U_0<E$,
-A double switch K,
-An inductor (coil) of inductance $L=0,5H$ and of resistance $r=7\Omega$.

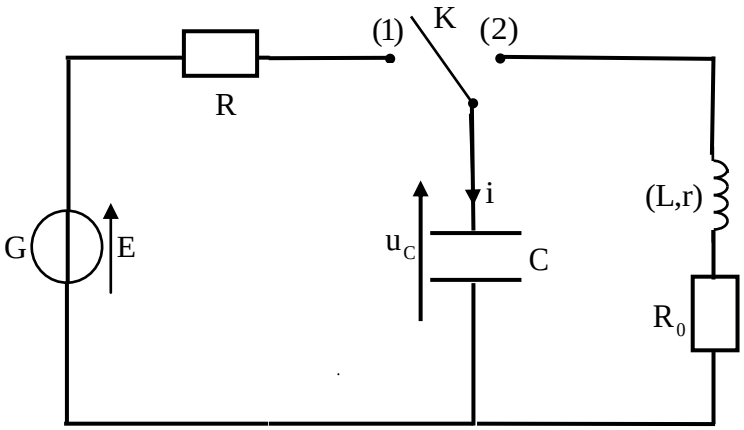

Figure 1

1-Charging the capacitor:

At an instant $(t=0)$ assumed origin of time, we put the switch K at position (1).
An electric current $i(t)$ flows in the circuit.

The curve in figure 2 represents the variation of $i(t)$ with time. (T) is the tangent of the curve at $t=0$.

0,5 **1-1-**Find out the differential equation of the electric current $i(t)$.

0,5 **1-2-** Determine the value of the resistance R of the resistor.

0,5 **1-3-** Determine U_0 .

0,5 **1-4-**Find out, in terms of C, E and U_0 the expression the electric energy E_{el} received by the capacitor during the whole transient state. Calculate its value.

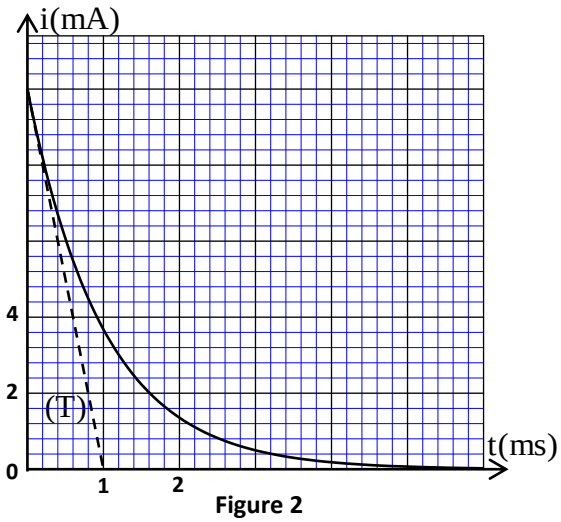

Figure 2

2-Free oscillations in (RLC) series circuit:

When, the steady state is reached, we put the switch K at position (2), at an instant $(t=0)$ assumed a new origin of time.

0,5 **2-1-** Based on the expression of the electric power, find out the expression of the magnetic energy stored $E_m(t)$ in the inductor, at one instant of time t, in terms of L and $i(t)$.

0,5 **2-2-** Find out the expression of $\frac{dE_t(t)}{dt}$ in terms of r, R_0 and $i(t)$ where $E_t(t)$ is the total energy of the circuit.

2-3- The experimental study shows that the state of the oscillations is pseudo-periodic and the voltage between the resistor terminals takes its maximum values $u_{R_0}(t_1) = 0,44\,V$ at an instant $t = t_1$.
Determine the energy dissipated $|\Delta E|$ in the circuit between the instants $t = 0$ and t_1.

II-Forced oscillations in (RLC) series circuit

We set up the mounting sketched in figure 3. It consists of:
-A low frequency generator ∿,
- An inductor of inductance L_0 and of resistance r_0,
-The resistor of the resistance $R_0 = 30\,\Omega$,
-The capacitor of capacitance $C = 2,5\,\mu F$.
The generator delivers a sinusoidal alternating voltage $u(t)=U_m\cos(2\pi Nt)$ of adjustable frequency N. An electric current of intensity $i(t)=I_m\cos(2\pi Nt+\varphi)$ flows in the circuit.
We vary the frequency N of the voltage $u(t)$ keeping the maximum voltage U_m constant. The experimental study permits to draw curves shown in figures 4 and 5 where Z is the impedance of the circuit and I_m is the maximum intensity of the current.

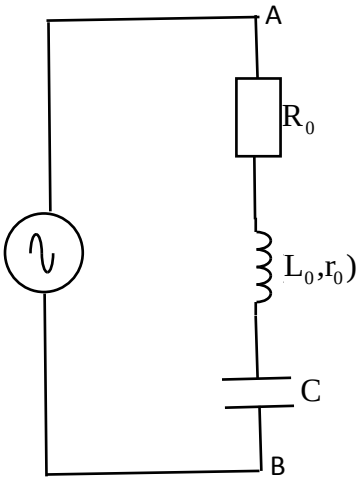

Figure 3

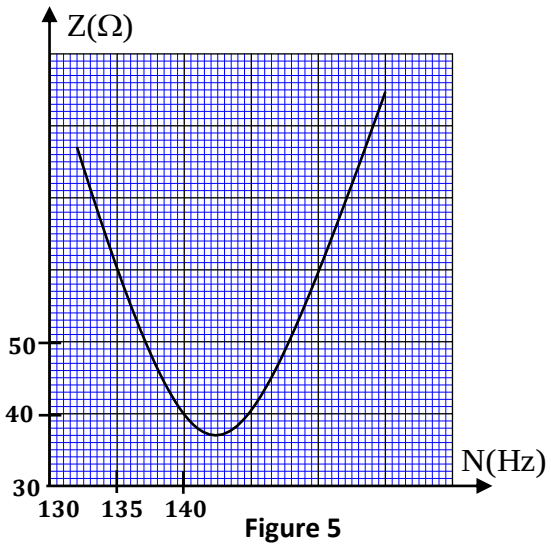

Figure 5

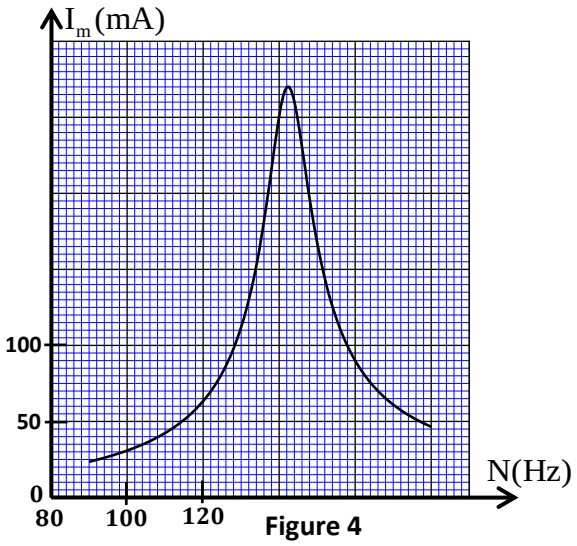

Figure 4

0,5 **1-**Choose which one of the following statements is true:
a-The low frequency generator ∿ functions as the resonating system.
b-The oscillations in the circuit are free.
c- φ represents the power factor.
d-The quality factor expression is $Q = \dfrac{N_0}{\Delta N}$.

0,75 **2-**Determine the values of U_m, L_0 and r_0.

0,5 **3-** Determine the value of the average electric power consumed in the circuit at the resonance.

Mechanics : (5,5 points)

Part I and part II are independent

Part I: Study of the motion of an oscillating system (solid – spring)

In this part, we study the motion of an oscillating elastic system in two situations:
-the oscillating system is horizontal,
-the oscillating system is vertical.
The oscillating system is modelled by a system (solid-spring) which consists of a solid (S) of mass m and a spring with non-contiguous turns. Its mass is negligible and its spring constant is K.
We denote T_0 the natural period of this oscillating system.
We study the motion of the centre of inertia G of the solid in a frame of reference linked to the earth assumed Galilean.
All frictions are negligible and we take $\pi^2 = 10$.

1-Study of the horizontal oscillating system:

The spring is horizontal, one end is on a fixed stand and the other end is attached to the solid (S) which slides on the horizontal plane.
We locate the position of G at one instant of time by the displacement x in the x-axis $(O,\vec{i})$. At equilibrium, the centre of inertia of the solid coincides with the origin of the frame (figure 1).

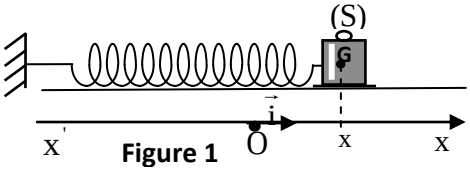

Figure 1

We pull (S) from its equilibrium position and we release it without initial velocity at an instant assumed origin of time $(t = 0)$.
The curve in figure 2 represents the variation of the acceleration a_x of centre of inertia G with time.

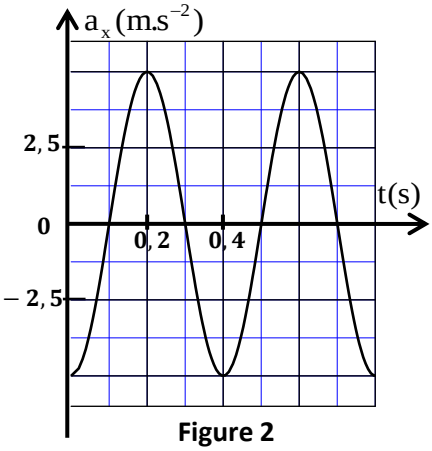

Figure 2

0,25 **1-1-** Using the Newton second law, establish the differential equation of the displacement $x(t)$.

0,75 **1-2-** The solution of the differential equation is

$$x(t) = x_m \cos\left(\frac{2\pi}{T_0}t + \varphi\right).$$

Determine the value of x_m and that of φ.

2- Study of the vertical oscillating system:

In this situation, we set up the spring as shown in figure 3. One end of the spring is attached to the solid (S) and the other is fixed to a stand.
We locate the position of G at one instant t by the displacement z in the z-axis $(O,\vec{k})$. At equilibrium, the centre of inertia of the solid coincides with the origin of the frame (figure 3).
We displace vertically (S) from its equilibrium position downward, then we release it without initial velocity at an instant assumed origin of time $(t = 0)$. The oscillating system vibrates in the z-axis (Oz).
Assume the gravitational potential energy E_{pp} to be zero $(E_{pp} = 0)$ on the horizontal plane passes through O (reference level) and the elastic potential energy E_{pe} to be zero $(E_{pe} = 0)$ when the spring is unstretched.

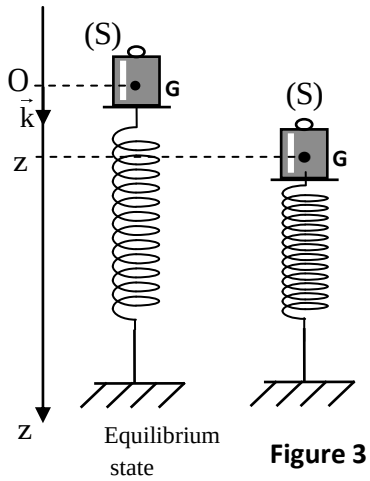

Figure 3

0,25 **2-1-** Determine, at the equilibrium, the expression of the elongation of the spring $\Delta\ell_0 = \ell - \ell_0$ in terms of m, K and the gravitational field strength g where ℓ the length of the spring at equilibrium and ℓ_0 its unstretched length.

0,5 **2-2-**Show that at an instant t, the expression of the total potential energy E_p of the oscillating system is written as $E_p = Az^2 + B$ where A and B are two constants.

2-3-The curve in figure 4 represents the variation of the total potential energy with the displacement z.

0,5 **2-3-1-** Determine the value of $\Delta\ell_0$ and that of K.

0,5 **2-3-2-**Based on the variation of the total potential energy E_p, determine the value of the work of the restoring force $\vec{T}$ applied by the spring on the solid (S) when G displaces from the position $z_1 = 0$ to the position $z_2 = 1,4\,cm$.

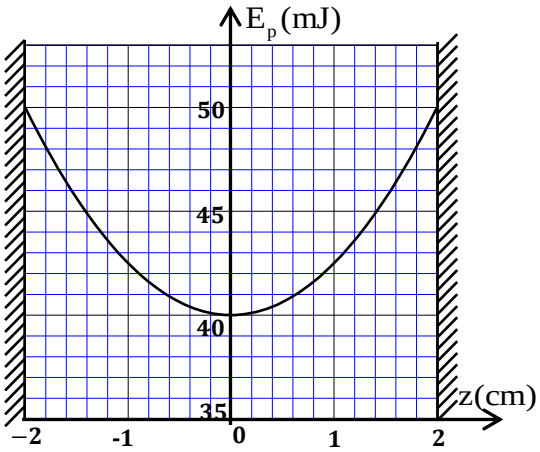

Figure 4

Part II: Determination of the radius of the moon trajectory around the earth

This part aims at determining the distance Earth-Moon based on both the study of the motion of the Earth around the Sun and that of the Moon around the Earth.
In each case, the motion is in a frame of reference assumed Galilean.
We consider that:
- Each of the Sun, the Earth and the Moon, has a uniform spherical mass.
- There is only one universal gravitational force acting on the Moon by the Earth.
- There is only one universal gravitational force acting on the Earth by the Sun.

Given :

- The orbital period of the centre of inertia G of the Earth around the Sun is $T = 365,25$ jours,
- The orbital period of the centre of inertia G' of the Moon around the Earth is $T' = 27,32$ jours,
- We assume that: - in the heliocentric frame, the path of the centre G is circular of radius $R = 1,49.10^8$ km, its centre is the centre of inertia of the Sun.
  - in the geocentric frame, the path of the centre G' is circular; its centre coincides with G and of radius r.

We denote M the mass of the Sun, m the mass of the Earth and m' that the Moon.
We take $\frac{M}{m} = 3,35.10^5$.

0,25 **1-** Define the geocentric frame of reference.

0,5 **2-** Choose which one of the following statements is true:
a-The gravitational constant is expressed in $m.s^{-2}$.
b-The acceleration of the centre G of the Earth is tangent of the circular path around the Sun.
c-The acceleration has the same direction for a uniform circular motion.
d-The velocity of the uniform circular motion of the planet is not depended on the mass of the planet.

0,25 **3-**In the Frenet base $(\vec{u}, \vec{n})$, write the expression of the gravitational force between the Sun and the Earth.

0,5 **4-**Applying the Newton second law, show that the motion of the centre of inertia G of the Earth around the Sun is uniform and circular.

0,5 **5-**Establish the relationship of the Kepler third law of the motion of the centre of inertia G of the Earth around the Sun.

0,75 **6 -**Find the expression of the radius r in terms of m, M, T, T' and R. Calculate its value.